M100001428 PCB.SchDoc

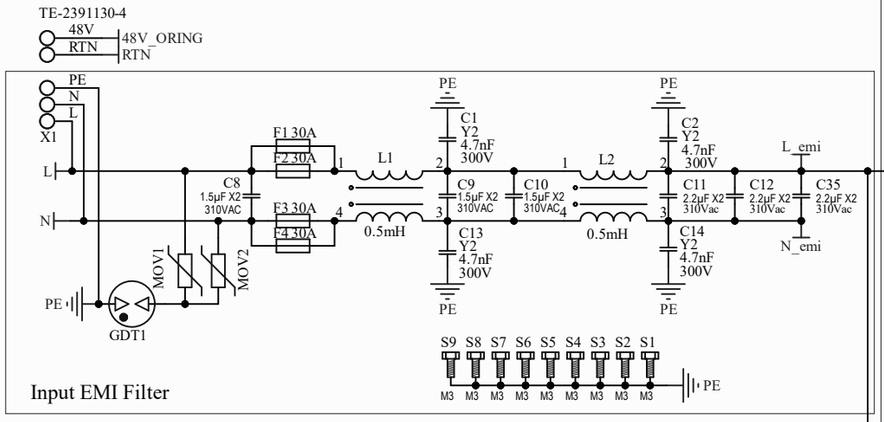

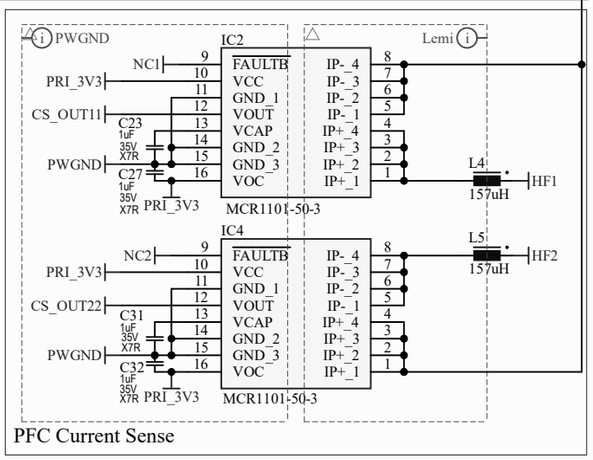

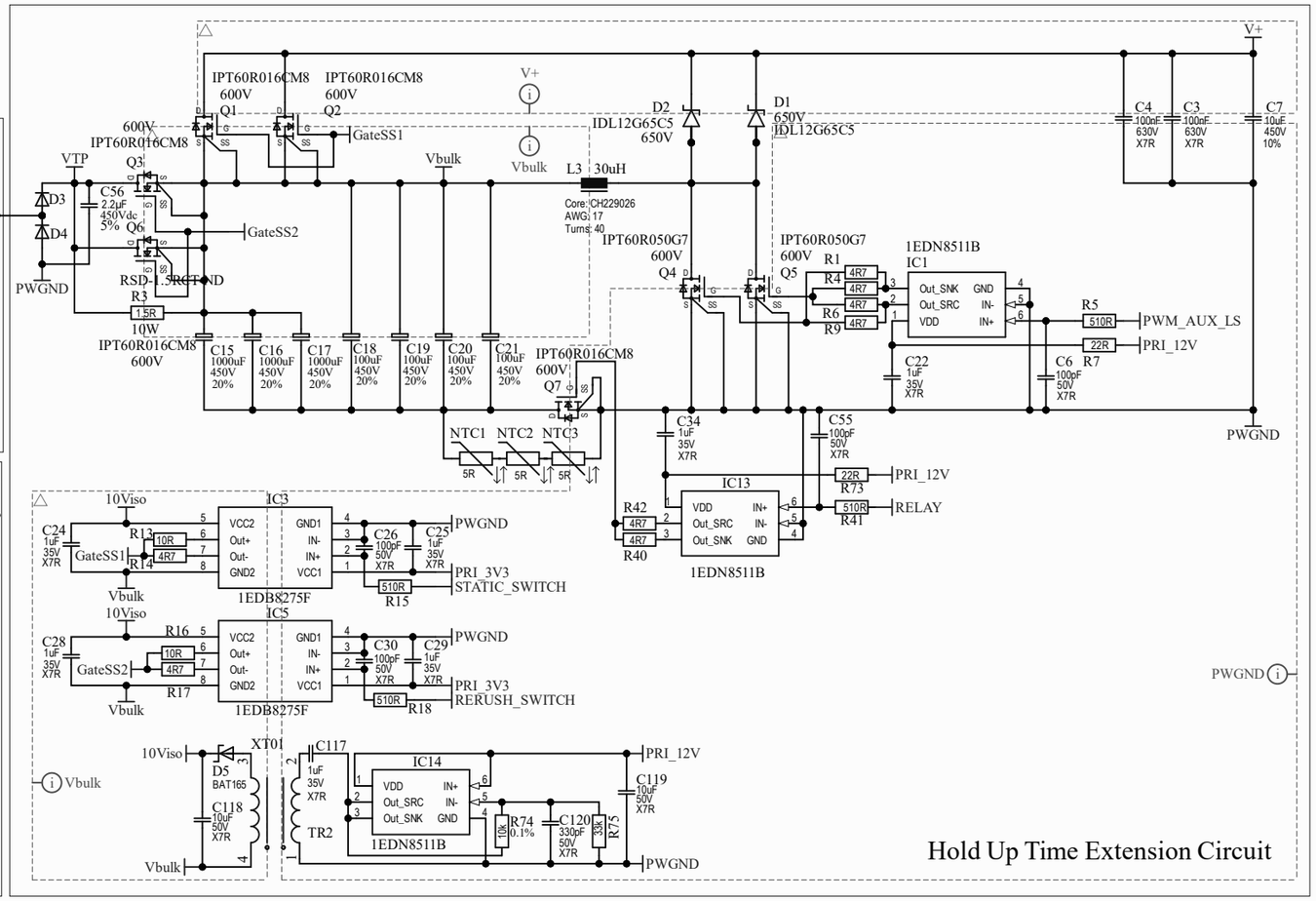

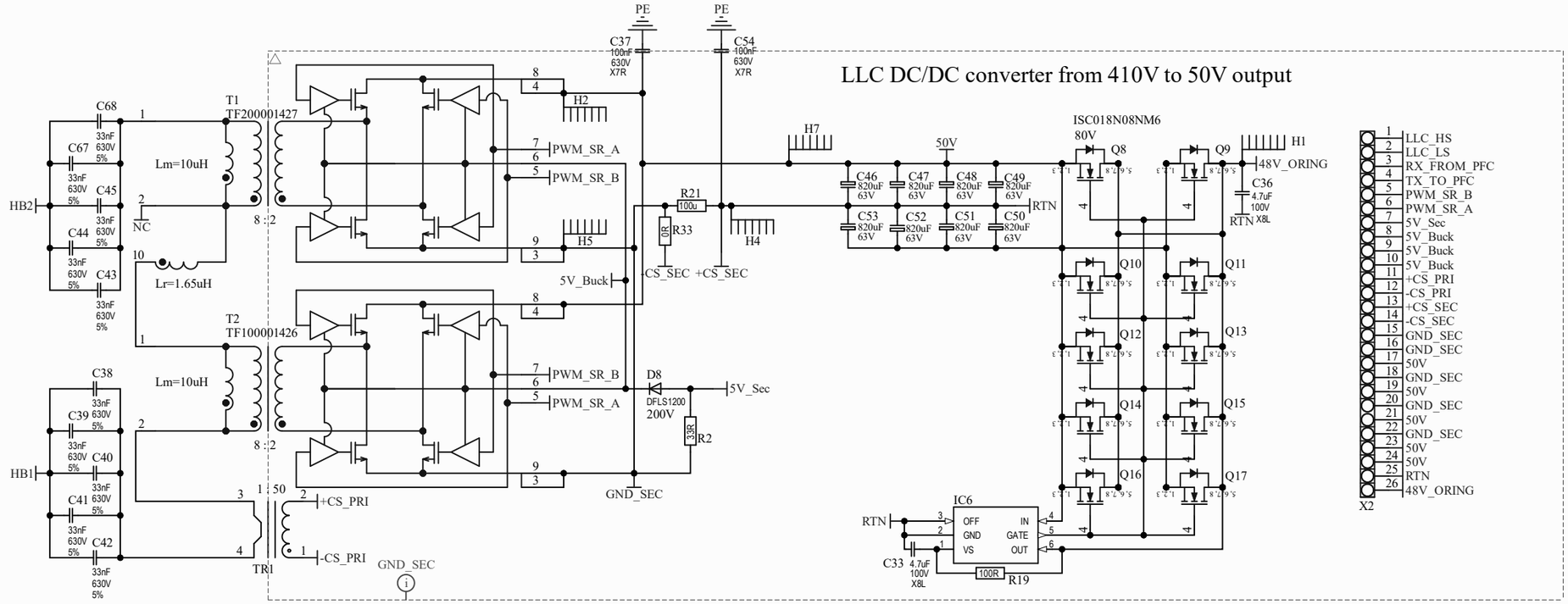

V1.0

Infineon Technologies AG
IFAT PSS GAN SAM SAA SAE
Siemensstraße 2 - 9500 Villach - Österreich

Title	8kW AI Rectifier		
Variant	[No Variations]	Approved	<Appr.>
Size: A3	Document Name: M100001428 PCB.SchDoc	Rel.	Rev. 1.0
Author: Matteo-Alessandro Kutschak			
Date: 09.01.2025 Time: 10:19:51	SVN Revision:		

© Infineon Technologies AG 2021. All Rights Reserved.

Sheet 1 of 2

Infineon Technologies Austria AG assumes no liability for re-use, application, customer product design or infringement of patents related to the present material.
and is not considered by Infineon Technologies Austria AG to be part of a finished end product for general consumer uses.
This Evaluation Board/Kit/Module/Layout is intended for use for ENGINEERING DEVELOPMENT, DEMONSTRATION, OR EVALUATION PURPOSES ONLY

M100001428_1PCB.SchDoc

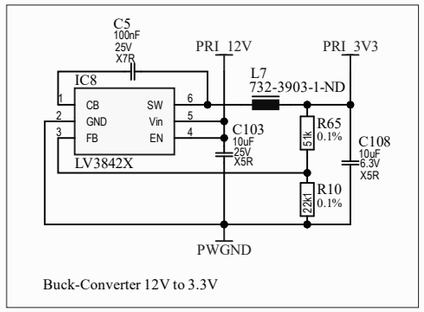

Buck-Converter 12V to 3.3V

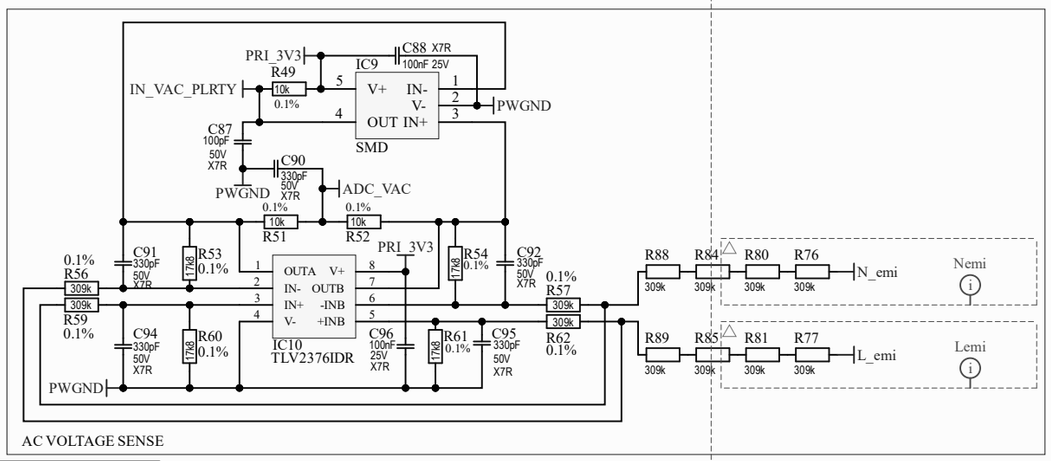

AC VOLTAGE SENSE

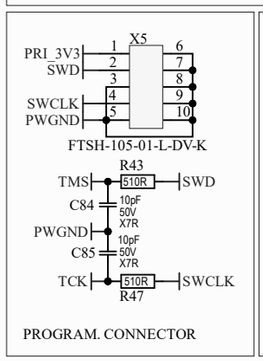

PROGRAM. CONNECTOR

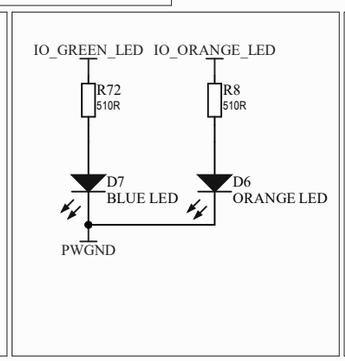

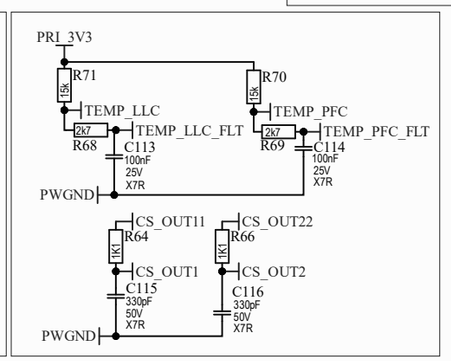

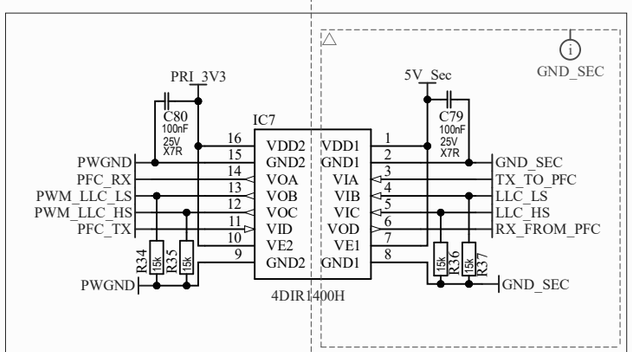

SIGNAL ISOLATION

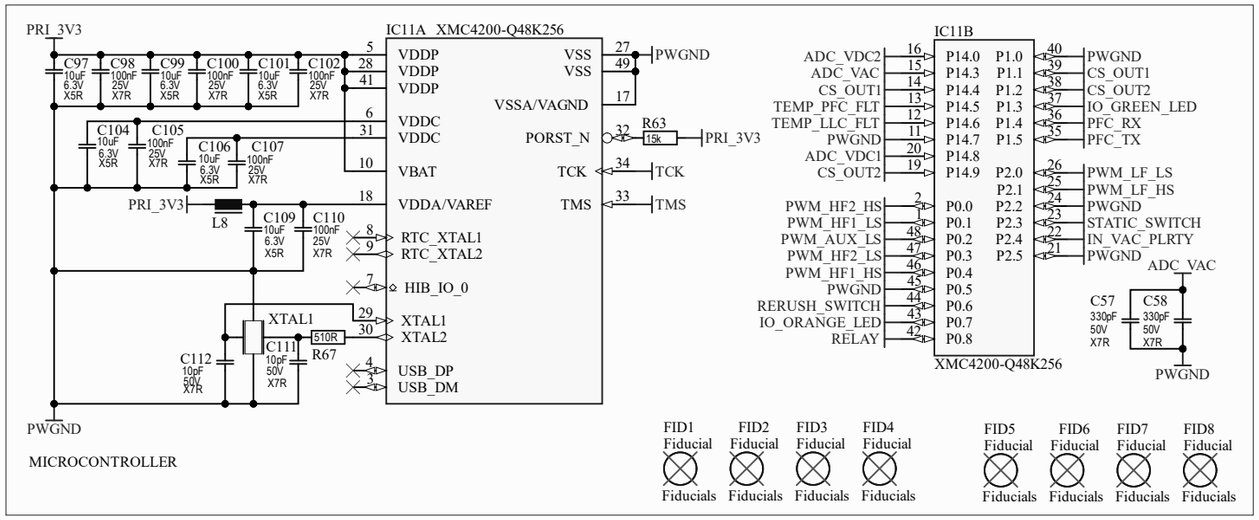

MICROCONTROLLER

FID1 Fiducial Fiducials
FID2 Fiducial Fiducials
FID3 Fiducial Fiducials
FID4 Fiducial Fiducials
FID5 Fiducial Fiducials
FID6 Fiducial Fiducials
FID7 Fiducial Fiducials
FID8 Fiducial Fiducials

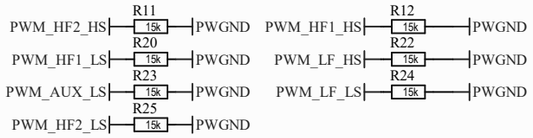

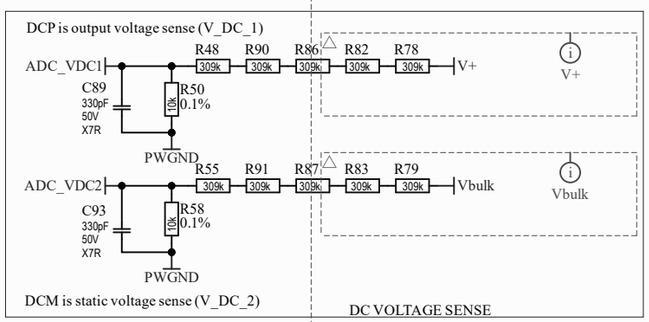

DC VOLTAGE SENSE

PWGND

V1.0
Restricted

Infineon Technologies Austria AG assumes no liability for re-use, application, customer product design or infringement of patents related to the present material.
and is not considered by Infineon Technologies Austria AG to be part of a finished end product for general consumer uses.
This Evaluation Board/Kit/Module/Layout is intended for use for ENGINEERING DEVELOPMENT, DEMONSTRATION, OR EVALUATION PURPOSES ONLY

Infineon Technologies AG
IFAT PSS GAN SAM SAA SAE
Siemensstraße 2 - 9500 Villach - Österreich

Title	8kW AI Rectifier		
Variant	[No Variations]	Approved	*
Size: A3	Document Name: M100001428_1PCB.SchDoc	Rel.	Rev. 1.0
Author: Matteo-Alessandro Kutschak			
Date: 09.01.2025 Time: 10:19:51	SVN Revision:		
© Infineon Technologies AG 2021. All Rights Reserved.		Sheet 1	of 1